Electrolux PROFESSIONAL

Modular Cooking Range Line 900XP Full Module Electric Fry Top, Chromium Plated

ITEM #

MODEL #

NAME #

SIS #

AIA #



391073 - 391176 - 391074 - 391177

Short Form Specification

Item No.

Smooth cooking polished chrome surface. To be installed on open base installations, bridging supports or cantilever systems. Removable drawer below the cooking surface for the collection of grease and fat. Body and work top of unit entirely in stainless steel with Scotch Brite finish. Extra strength work top in heavy duty 2 mm stainless steel. Right-angled side edges to allow flush-fitting junction between units.

APPROVAL:

Main Features

- Unit to be mounted on open base cupboards, bridging supports or cantilever systems.
- Large drain hole on cooking surface permits the draining of fat into large 1 liter collector placed under the cooking surface.
- Electric elements in incoloy positioned under the cooking plate.
- Safety thermostat and thermostatic control.
- Units have separate controls for each half module of the cooking surface.
- Stainless steel high splash guards on the rear and sides of cooking surface. Splash guards can be easily removed for cleaning and are dishwasher-safe.
- The special design of the control knob system guarantees against water infiltration.
- IPX5 water protection.
- Temperature range from 120° up to 280°C.
- Polished chromium surface avoids the mixing of flavors when passing from one type of food to another.
- Cooking surface 15mm thick polished chrome for optimum grilling results and ease of use.
- Suitable for countertop installation.

Construction

- Unit is 930 mm deep to give a larger working surface area.
- All exterior panels in Stainless Steel with Scotch Brite finishing.
- AISI 304 stainless steel worktop, 2mm thick.
- Model has right-angled side edges to allow flush fitting joints between units, eliminating gaps and possible dirt traps.
- Cooking surface completely smooth. (only for 391073, 391176)
- Cooking surface 2/3 smooth and 1/3 ribbed. (only for 391074, 391177)

Included Accessories

- 1 of Scraper for smooth plate fry tops PNC 164255
- 1 of Scraper for ribbed plate fry tops - kit includes knife blades for both smooth and ribbed surface (only for 391074, 391177) PNC 206420

Optional Accessories

- Scraper for smooth plate fry tops PNC 164255 ❑
- Junction sealing kit PNC 206086 ❑
- Support for bridge type installation, 800mm PNC 206137 ❑
- Support for bridge type installation, 1000mm PNC 206138 ❑
- Support for bridge type installation, 1200mm PNC 206139 ❑

• Support for bridge type installation, 1400mm	PNC 206140	❑
• Support for bridge type installation, 1600mm	PNC 206141	❑
• 2 panels for service duct for single installation (only for 391177)	PNC 206181	❑
• 2 panels for service duct for back to back installation (only for 391176)	PNC 206202	❑
• Chimney upstand, 800mm (only for 391074)	PNC 206304	❑
• Back handrail 800 mm	PNC 206308	❑
• Back handrail 1200 mm	PNC 206309	❑
• Grease/oil kit container for 700 line frytops (half and module) and 900 line frytops (module)	PNC 206346	❑
• Rear paneling - 1200mm (700/900) (only for 391073)	PNC 206376	❑
• Chimney grid net, 400mm (700XP/900)	PNC 206400	❑
• Scraper for ribbed plate fry tops - kit includes knife blades for both smooth and ribbed surface (only for 391074, 391177)	PNC 206420	❑
• Cloche for fry tops	PNC 206455	❑
• Side handrail-right/left hand (900XP)	PNC 216044	❑
• Frontal handrail, 800mm	PNC 216047	❑
• Frontal handrail, 1200mm	PNC 216049	❑
• Frontal handrail, 1600mm	PNC 216050	❑
• Water drain for full module fry tops	PNC 216153	❑
• Large handrail - portioning shelf, 800mm	PNC 216186	❑
• 2 side covering panels for top appliances	PNC 216278	❑

ACC_CHEM

• C41 HI-TEMP RAPID DEGREASER, 1 pack of six 1 lt. bottles (trigger incl.)	PNC 0S2292	❑

The company reserves the right to make modifications to the products without prior notice. All information correct at time of printing.

Modular Cooking Range Line
900XP Full Module Electric Fry Top, Chromium Plated

Front

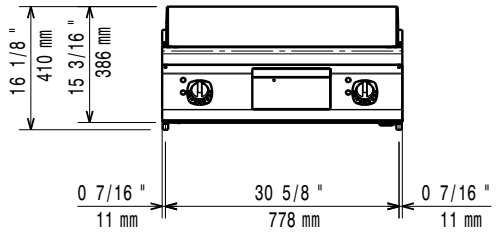

Side

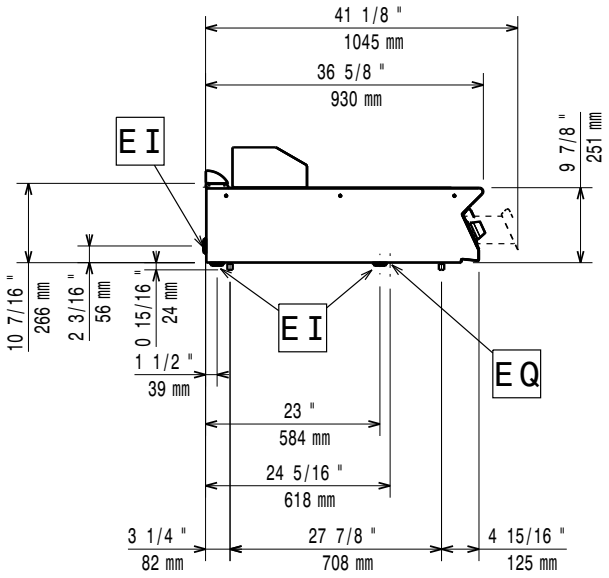

EI = Electrical inlet (power)
EQ = Equipotential screw

Top

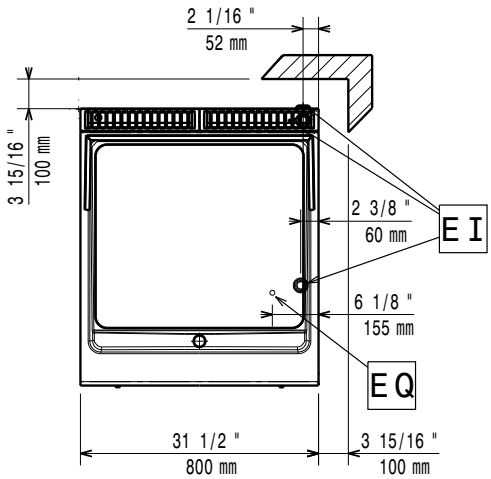

Electric

Supply voltage:	
391073 (E9FTEHCS00)	380-400 V/3 ph/50-60 Hz
391176 (E9FTEHCS0N)	230 V/3 ph/50/60 Hz
391074 (E9FTEHCP00)	380-400 V/3 ph/50-60 Hz
391177 (E9FTEHCP0N)	230 V/3 ph/50/60 Hz
Electrical power max.:	15 kW
Total Watts:	15 kW

Key Information:

Working Temperature MIN:	120 °C
Working Temperature MAX:	280 °C
External dimensions, Width:	800 mm
External dimensions, Depth:	930 mm
External dimensions, Height:	250 mm
Net weight:	
391073 (E9FTEHCS00)	90.5 kg
391176 (E9FTEHCS0N)	105 kg
391074 (E9FTEHCP00)	88 kg
391177 (E9FTEHCP0N)	105 kg
Shipping weight:	
391073 (E9FTEHCS00)	101 kg
391176 (E9FTEHCS0N)	102 kg
391074 (E9FTEHCP00)	98 kg
391177 (E9FTEHCP0N)	120 kg
Shipping height:	
391073 (E9FTEHCS00)	560 mm
391176 (E9FTEHCS0N)	540 mm
391074 (E9FTEHCP00)	540 mm
391177 (E9FTEHCP0N)	540 mm
Shipping width:	
391073 (E9FTEHCS00)	1020 mm
391176 (E9FTEHCS0N)	900 mm
391074 (E9FTEHCP00)	1020 mm
391177 (E9FTEHCP0N)	1020 mm
Shipping depth:	
391073 (E9FTEHCS00)	860 mm
391176 (E9FTEHCS0N)	1020 mm
391074 (E9FTEHCP00)	860 mm
391177 (E9FTEHCP0N)	860 mm
Shipping volume:	
391073 (E9FTEHCS00)	0.49 m³
391176 (E9FTEHCS0N)	0.5 m³
391074 (E9FTEHCP00)	0.47 m³
391177 (E9FTEHCP0N)	0.47 m³
[NOT TRANSLATED]	
391073 (E9FTEHCS00)	EFT92
391176 (E9FTEHCS0N)	N9RE1
391074 (E9FTEHCP00)	EFT92
391177 (E9FTEHCP0N)	N9RE1
Cooking surface width:	707 mm
Cooking surface depth:	624 mm

If appliance is set up or next to or against temperature sensitive furniture or similar, a safety gap of approximately 150 mm should be maintained or some form of heat insulation fitted.

The company reserves the right to make modifications to the products without prior notice. All information correct at time of printing.

2026.11.23